SFC TOOLS®

ECONOMY ROLLING MILL

28-281 (compact flat)
28-280 (5 rollers)
28-282 (7 rollers)

Box Contents:
Rolling mill with 2 flat rollers installed
Arm
Plastic handle
T-Bar
Additional wire and/or pattern rollers
(depending on model)

Things you may need:
Crescent wrench
Machine oil
A lightweight non-marring mallet

The SFC Tools rolling can perform a variety of tasks including thinning sheet, thinning wire, flattening wire, forming half-round and V-shape wire, straightening wire elements, and patterning metal. It is suitable for working with soft metal alloys like silver, brass, copper, and gold.

The gear ratio is 3:1. Rollers are all 75 mm in length, 40 mm in diameter.
Holes in the base allow it to be bolted to a table or workbench

This mill has a maximum opening of 5 gauge (3.75mm).

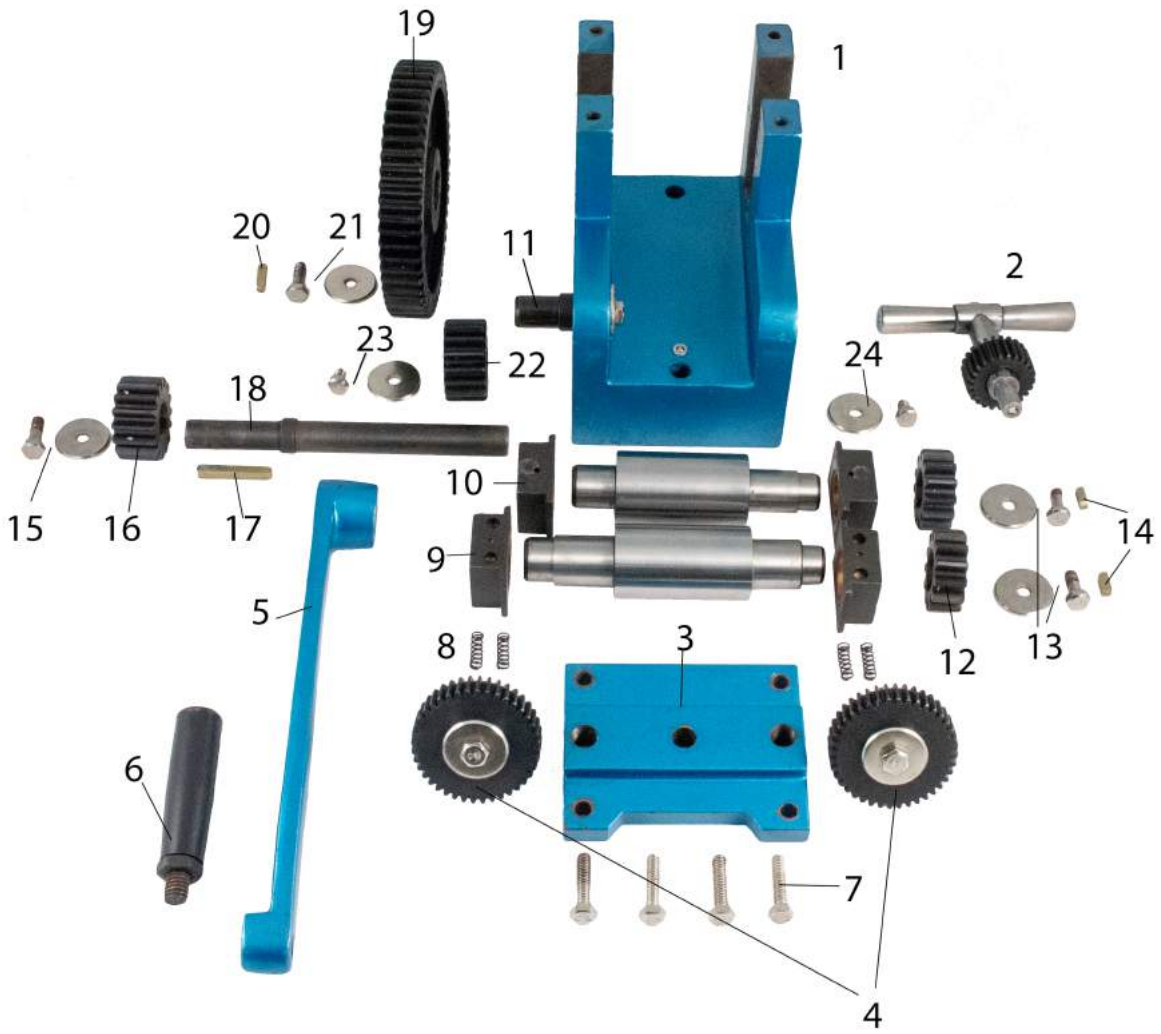

1. Mill Frame
2. T-Bar
3. Mill Top Plate
4. Roller Adjusting Wheels
5. Arm
6. Plastic Handle
7.Top Bolts
8. Springs
9. Lower Bushings
10. Upper Bushings
11. Idler Shaft
12. Side Gears
13. Side Washers and Bolts
14. Side Key Stock
15. Drive Shaft Washer and Bolt
16. Drive Shaft Gear
17. Drive Shaft / Arm Key Stock
18. Drive Shaft
19. Reduction Gear
20. Reduction Gear Key Stock
21. Reduction Gear Washer and Bolt
22. Idler Shaft Gear
23. Idler Shaft Washer and Bolt
24. Drive Shaft Washer and Bolt #2

Basic Assembly

1) Our rolling mills are packaged with a layer of grease that protects the mill from rust and corrosion during shipping. Wipe excess grease from the rollers.
2) Install the handle on the mill. The small end of the arm attaches to the plastic handle, the large end of the arm attaches to the left side of the front of the mill. Remove the nut and washer and align the arm with the key stock to install the arm.

3) Align the 2 top gears by tightning them all the way down, and then place the T-Bar in the top of the mill.

The mill is now assembled. Use the T-Bar to adjust the opening and turn the arm to feed metal through the mill.

Changing Rollers

Some rollers only require changing the top roller, such as the pattern rollers, special wire rollers, or the half round/triangle wire roller.

To change the top roller:

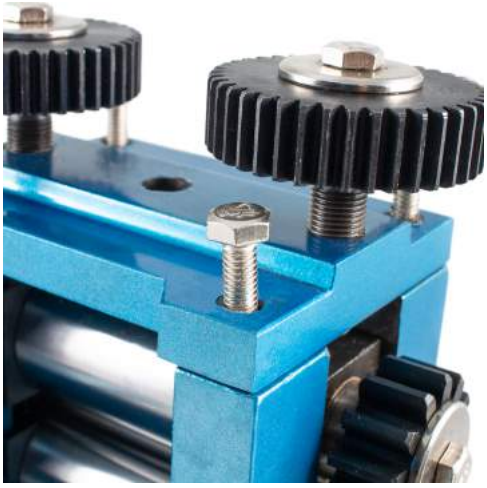

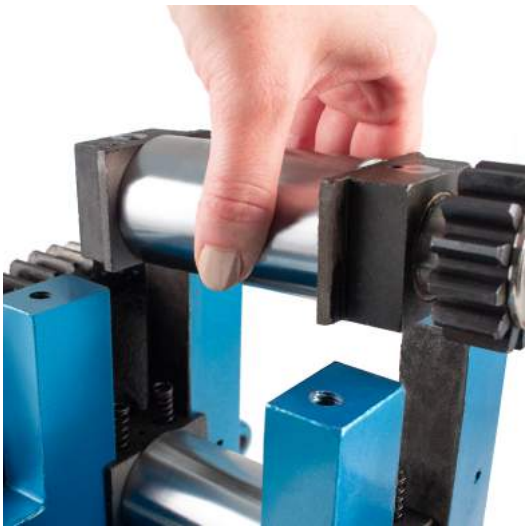

1) Remove the T-Bar from the top of the mill, and remove the four bolts in the top of the mill.
2) Slide the top roller out of the mill frame.
3) Remove the bolt holding the gear on the side of the roller, and slide the gear and bushings off the roller.

4) Re-assemble using the roller that you wish to switch to.
5) Re-assemble the mill by sliding the roller back in, placing the top back on the mill, and tightening the bolts.

To change the bottom roller:

1) Follow the first 2 steps above.
2) Remove the bolt that holds the large reduction gear on the side of the mill, and pull the large gear off the mill.
3) Slide the lower roller out of the mill frame.
4) Changing the bottom roller is the same as changing the top roller. Follow steps 3 - 4 of changing the top roller.
5) Follow these instructions in reverse to reassemble the mill.

Tips

Be careful not to lose the springs in between the rollers, as they are critical in providing tension between the rollers.
Be careful not to lose the key stock that aligns the gear on the roller.

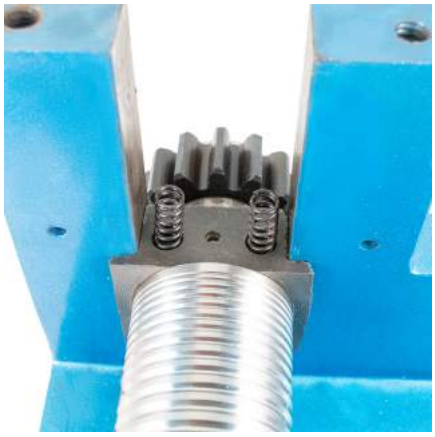

Be mindful of which direction the bushings on the side of the rollers face. They have a side intended for contact with the springs, and a side intended for lumbrication.
Lubricate your rollers while the mill is apart by dropping machine oil into the hole in the top of the bushings.
If you are having trouble getting parts to fit together, apply a thin layer of grease or oil and lightly tap them with a light weight non-marring mallet.

DO:

Anneal metal often
Keep the machine well lubricated by applying grease to the gears and oil to the roller bushings
Keep the rolls well oiled or greased while they aren't in use to prevent rust
Mount the rolling mill to a table for ease of use and to avoid injury
Pad the rollers when using the mill to texture the metal with texturing plates or found materials
Store additional rollers coated in grease or oil in a dry place

DON'T:

Make large reductions in metal thickness without annealing
Attempt to modify the rolling mill
Put hard metals such as ferrous metals through the mill
Expose the mill to water or humid environments
Allow uninformed people to operate the mill
Allow children to use the mill without supervision